Technical data sheet

SAIER All-In IoT Gateway

The SAIER All-in-One IoT Gateway connects remote-enabled SAIER devices to the SAIER CLOUD (SDDB).

This industrial-grade IoT Gateway features an integrated SIM card with data communication.

Specially developed SAIER firmware ensures secure and reliable data transmission via mobile networks.

IoT Gateway TRB 256		IoT Gateway RUT 956	
Electrical Data			
Operating voltage:	100 … 240 V	Operating voltage:	100 … 240 V
Frequency:	50 / 60 Hz	Frequency:	50 / 60 Hz
Input power:	3.5 W	Input power:	9 W
Dimensions (W x H x D)			
83 x 25 x 82.6 mm		109,6 x 50.1 x 100 mm	
Wireless technologies			
2G, LTE-M und NB-Iot		2G, 3G und 4G	
Other interfaces			
Ethernet (WAN)		Ethernet (WAN), Wifi	
Ambient conditions			
Ambient temperature range:		+10 … +45 °C	
Environmental stress:		in accordance with DIN EN 60068-2-38	

Dimensions IoT Gateway TRB 256

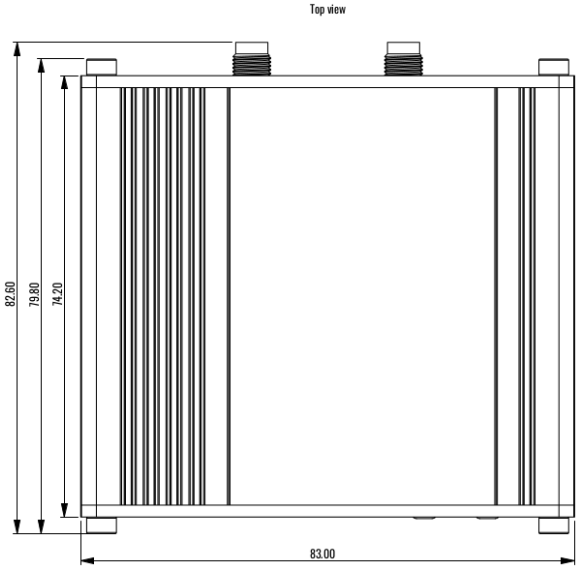

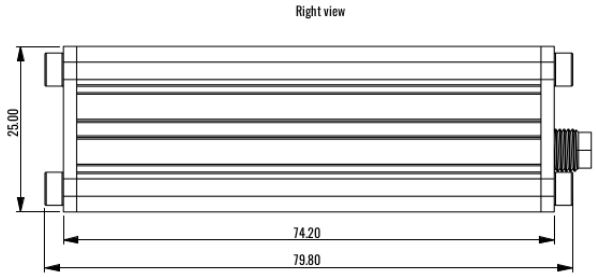

Dimensions IoT Gateway RUT 956

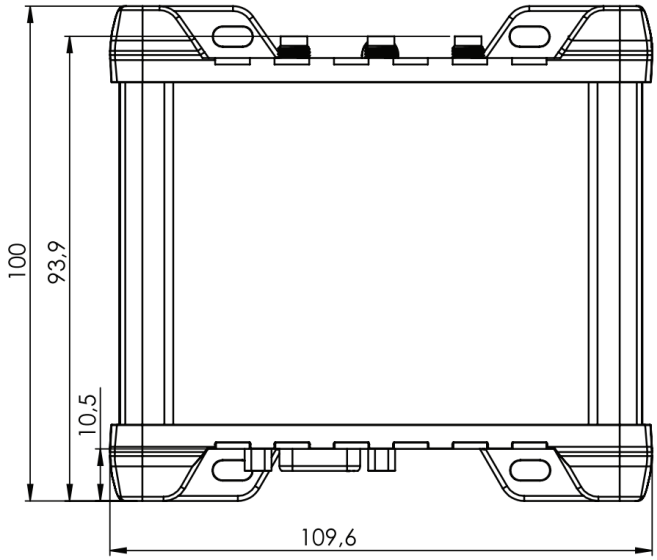

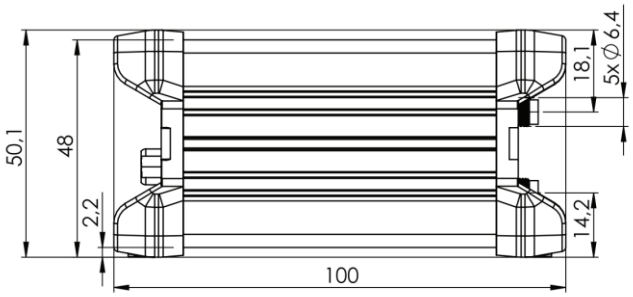

Scope of delivery	Designation	Parts
	IoT Gateway	Screw-on antennas SIM card, 5-metre connection cable Terminating resistor for RS485 bus, M12 Wall bracket (TRB 256 only)

Products	Art. no.	Designation	Scope of delivery
	1004800	IoT-Gateway TRB 256 Europa	Scope of delivery + Power supply unit with Euro plug
	1005112	IoT-Gateway TRB 256 USA	Scope of delivery + Power supply unit with US plug
	1006156	IoT-Gateway RUT 956 worldwide	Scope of delivery + Power supply unit with universell plug

Acces-sories	Art. no.:	Designation	
	1005428	Magnetic LTE antenna IoT Gateway connection (3m)	
	1006095	RUT 956 Universal mains adapter for the EU, US, UK and Australia	
	1005920	RS485 cable with 2x M12 sockets for connecting multiple devices (5m)	
	1005921	RS485 extension cable, M12 (10m)	
	1006074	RUT 956 connection cable with dosing unit (5m)	
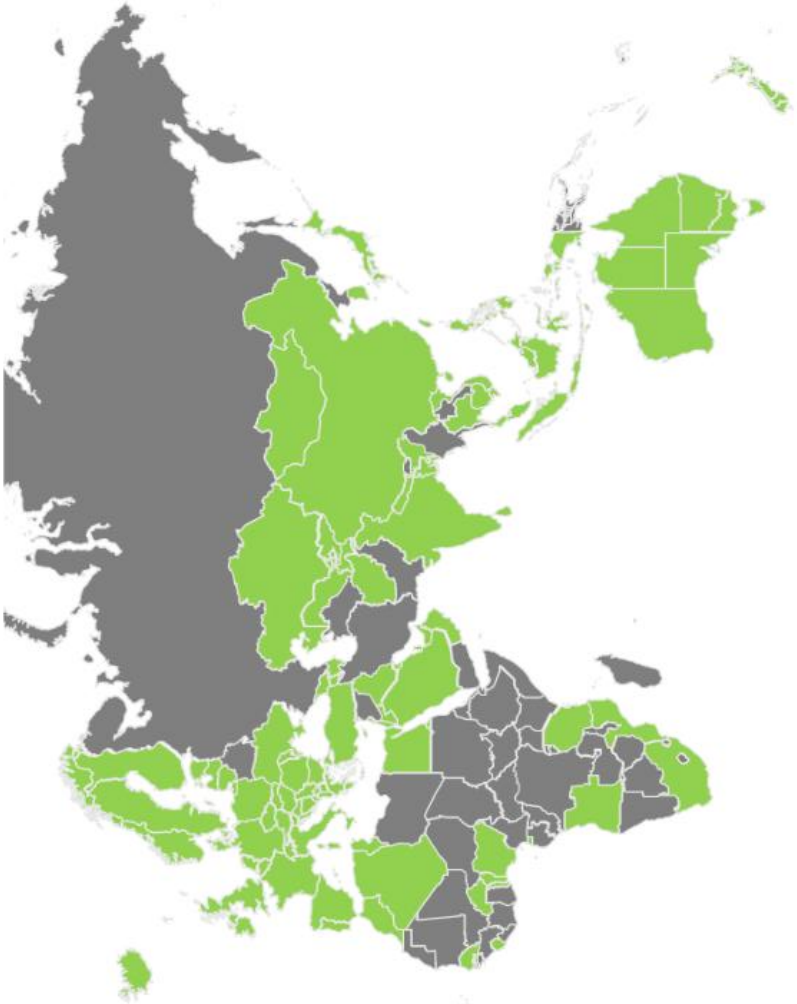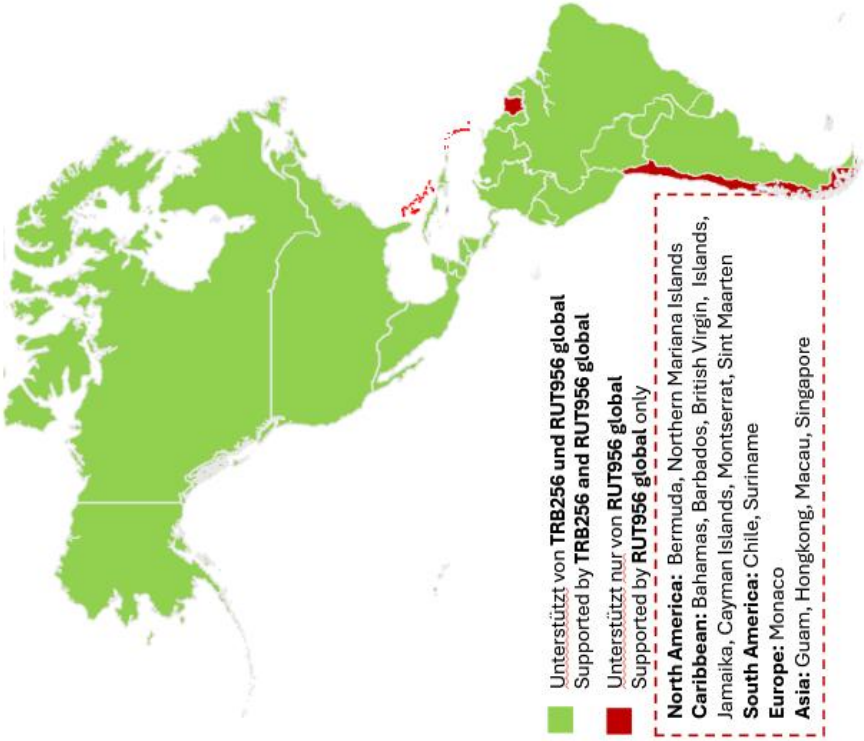
SAIER IoT Gateway – Global coverage. Reliable connection.